SCHEMATIC PAGE DESCRIPTION :

PAGE01: BLOCK DIAGRAM

PAGE02: POWER DISTRIBUTION

PAGE03: FPGA IO

PAGE04: FPGA CLOCK

PAGE05: FPGA Config

PAGE06: FPGA Power

PAGE07: SDRAM

PAGE08: System Power

PAGE09: Connectors

BLOCK DIAGRAM

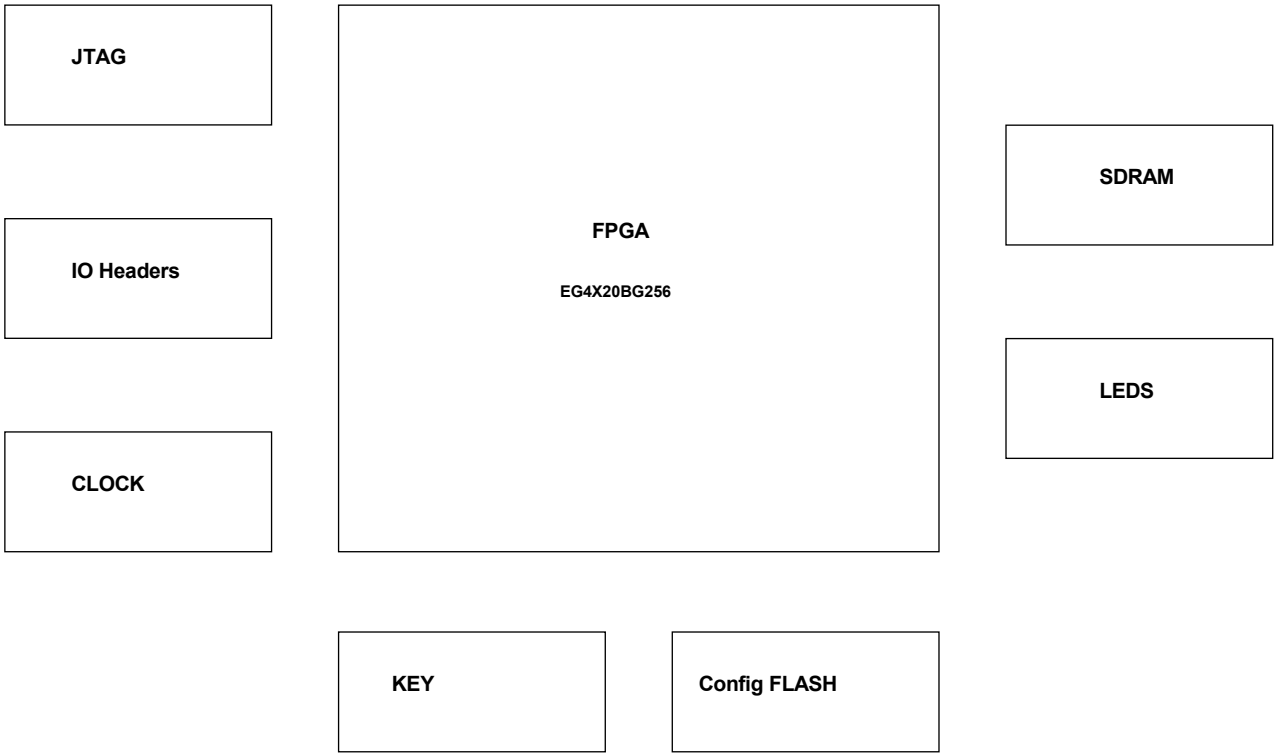

POWER CONSUMPTION

COMPONENTS	VOTAGE&CURRENT						
	1.2V	2.5V	3.3V				
FPGA	TBD	TBD	TBD				

POWER DISTRIBUTION

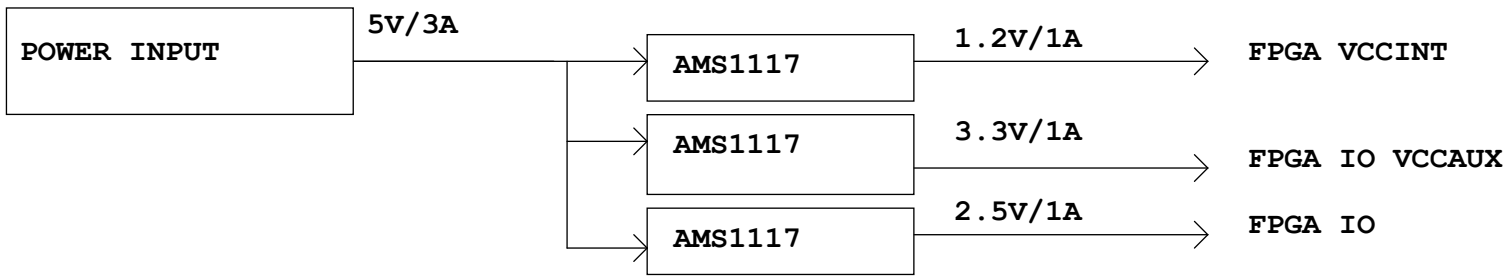

Chengdu Heiying electronic technology co.,Ltd

Title: Anlogic Eagle FPGA E104

Size: A | Document Number: Power Distribution | Rev: V2.0

Date: | Sheet 6 of 9

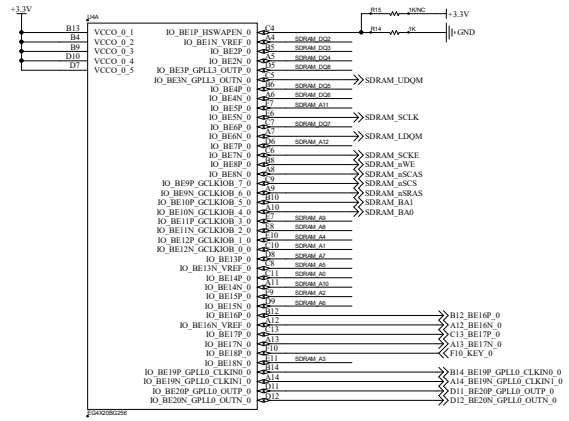

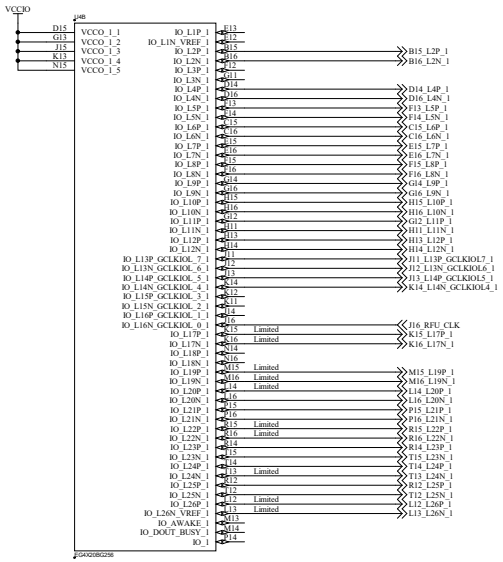

Limited:这些IO加载时不能一直保持高阻态；参考UG303特殊IO描述；

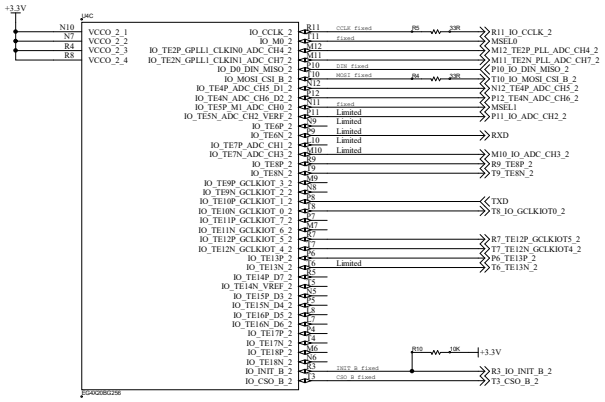

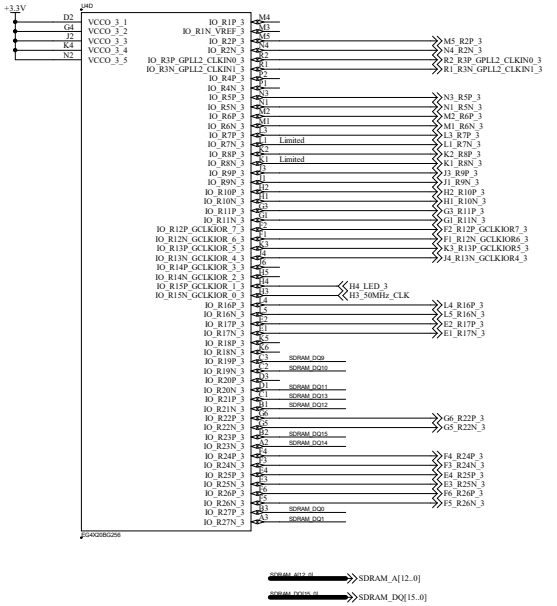

Chengdu Heiying electronic technology co.,Ltd			
Title	Anlogic Eagle FPGA E104		
Size A	Document Number FPGA IO		Rev 2.0
Date:		Sheet 2 of 2	

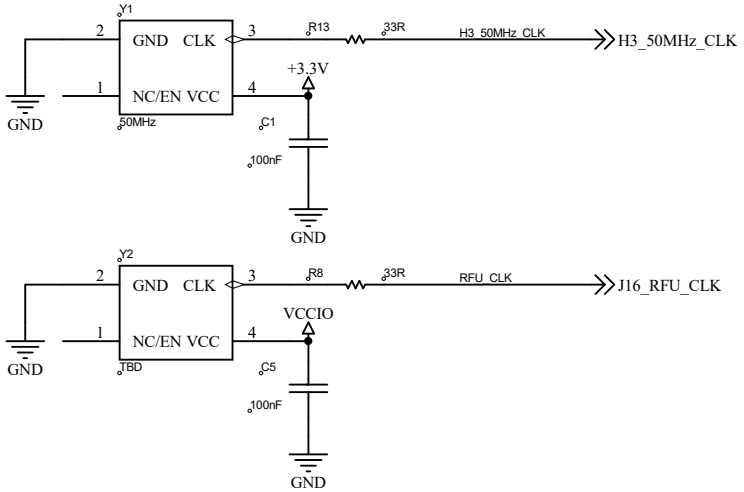

Chengdu Heiying electronic technology co.,Ltd

Title	Anlogic Eagle FPGA E104	
Size: A	Document Number: FPGA CLOCK	Rev: V2.0
Date:	Sheet 4 of 9	

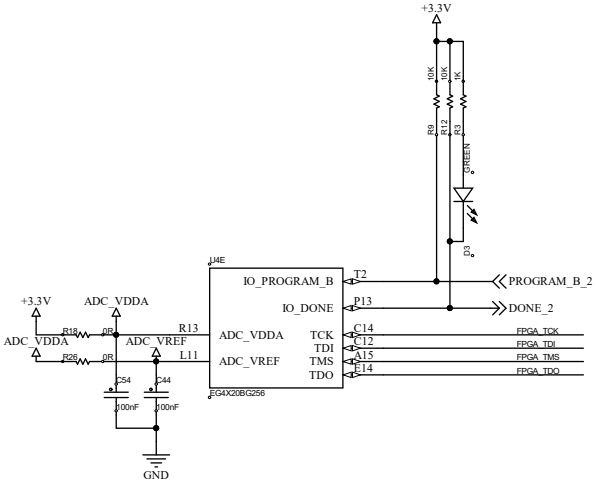

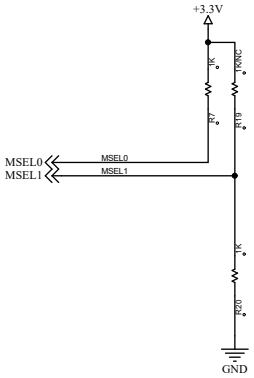

MSEL[1-0]	MODE
01	MSPI
11	SLAVE SERIAL

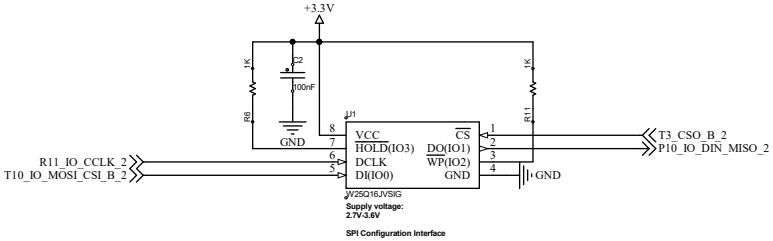

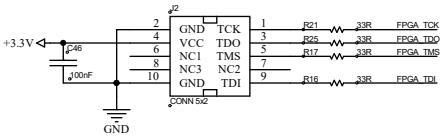

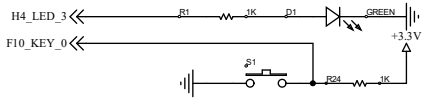

Chengdu Heiying electronic technology co.,Ltd

Title: Anlogic Eagle FPGA E104

Size: A | Document Number: FPGA Config | Rev: V2.0

Date: | Sheet 6 of 9

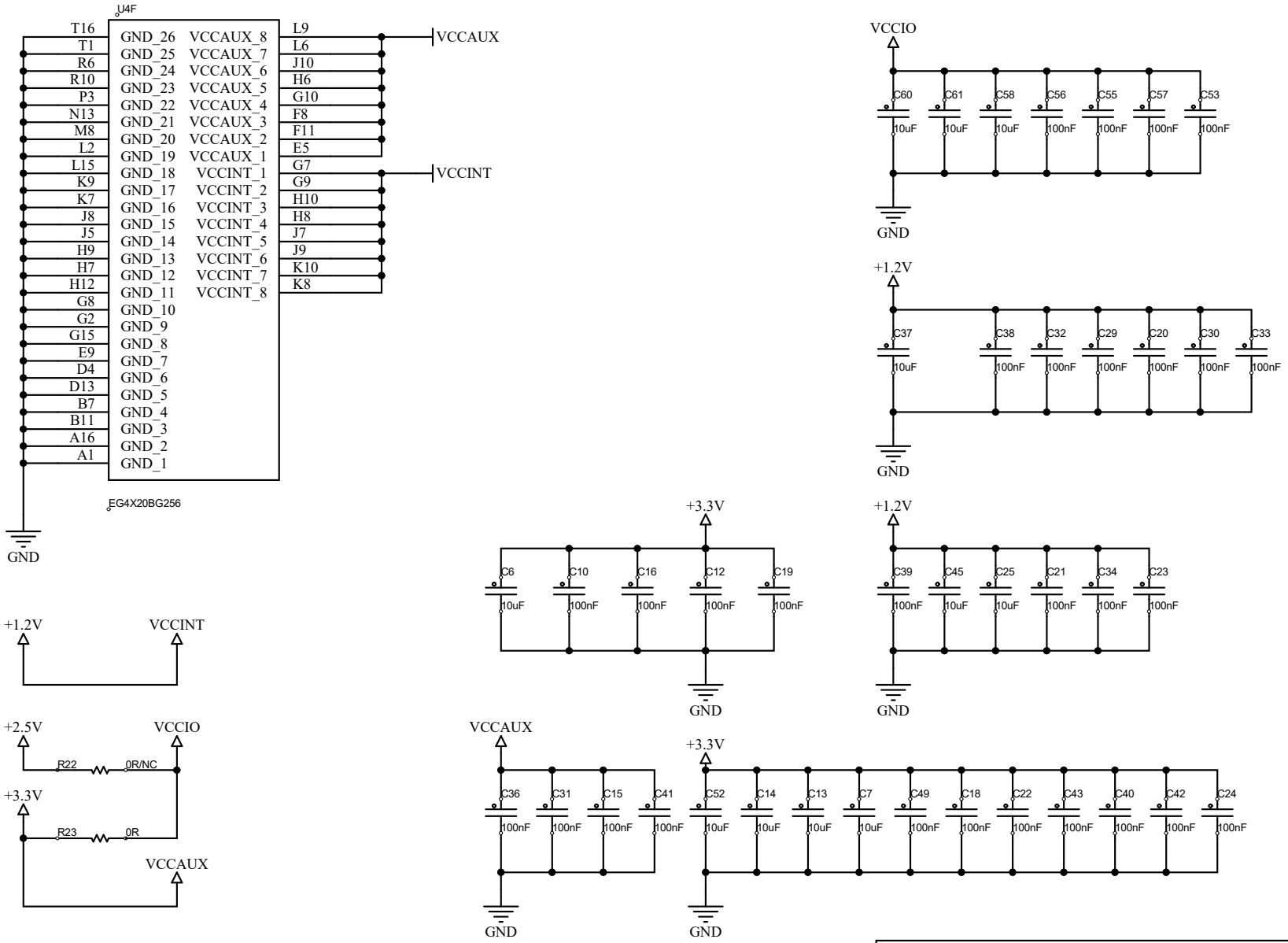

Chengdu Heiying electronic technology co.,Ltd

Title	Anlogic Eagle FPGA E104	
Size: A	Document Number: FPGA Power	Rev: V2.0
Date:	Sheet 6 of 9	

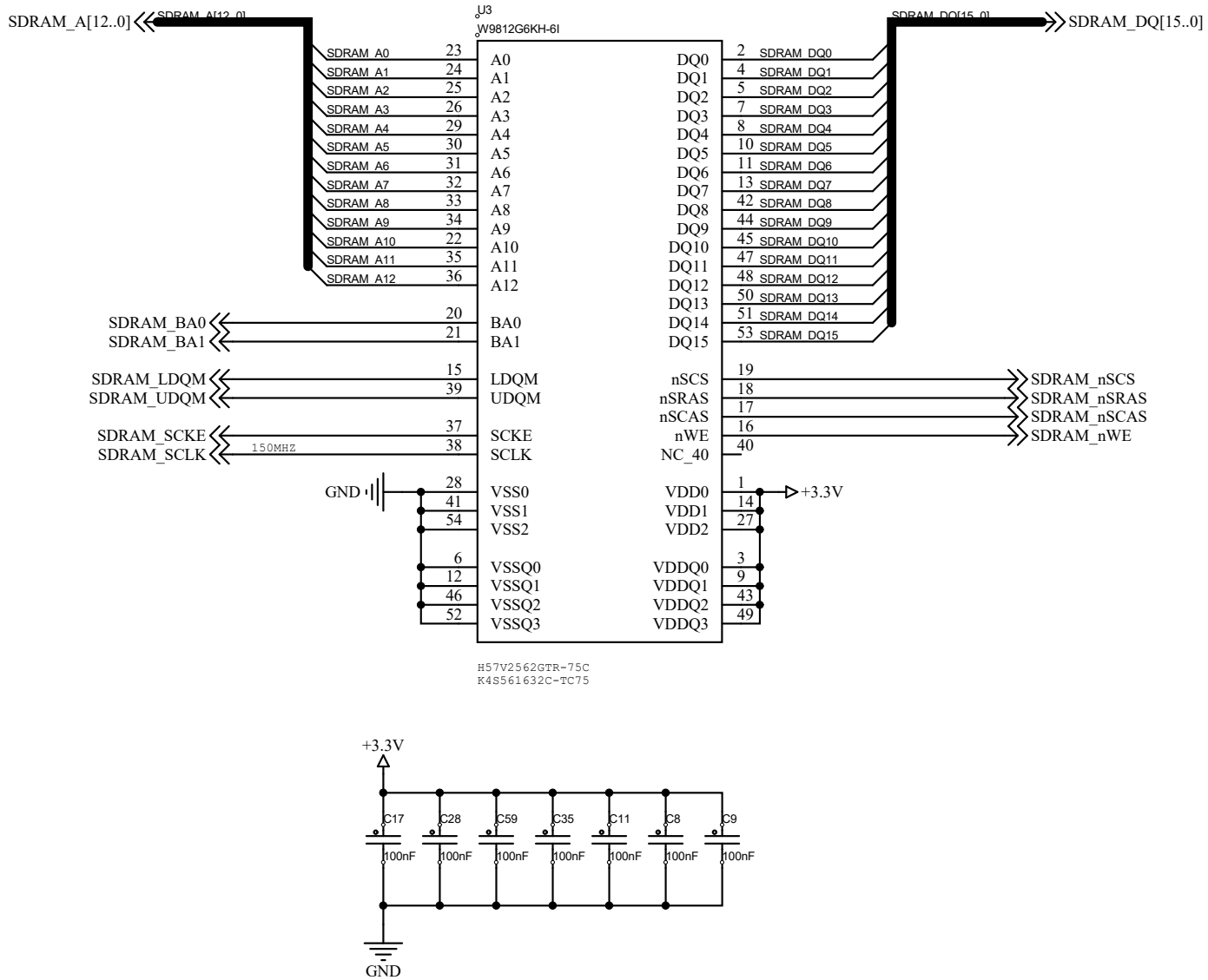

Chengdu Heiying electronic technology co.,Ltd

Title	Anlogic Eagle FPGA E104	
Size A	Document Number SDRAM	Rev V2.0
Date:	Sheet 7 of 9	

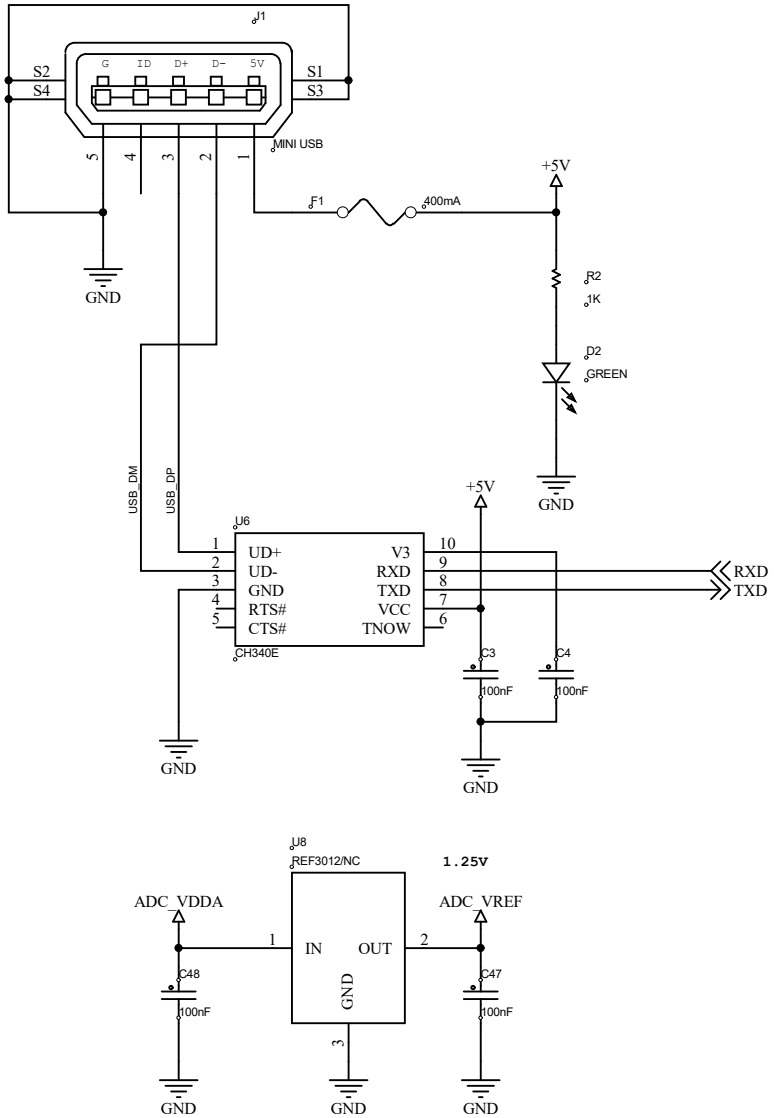

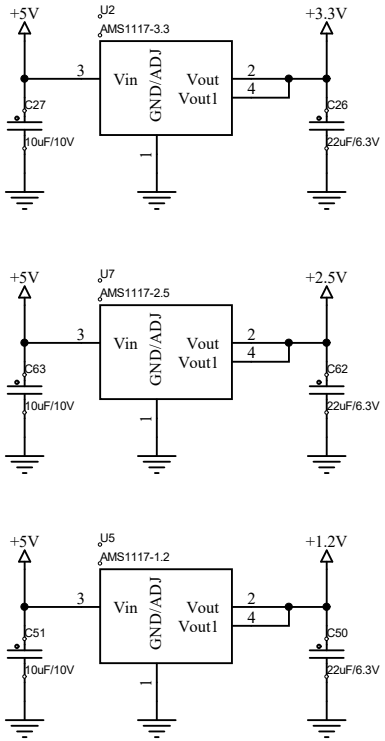

Chengdu Heiying electronic technology co.,Ltd		
Title: Anlogic Eagle FPGA E104		
Size: A	Document Number: System Power	Rev: V2.0
Date:	Sheet 8 of 9	

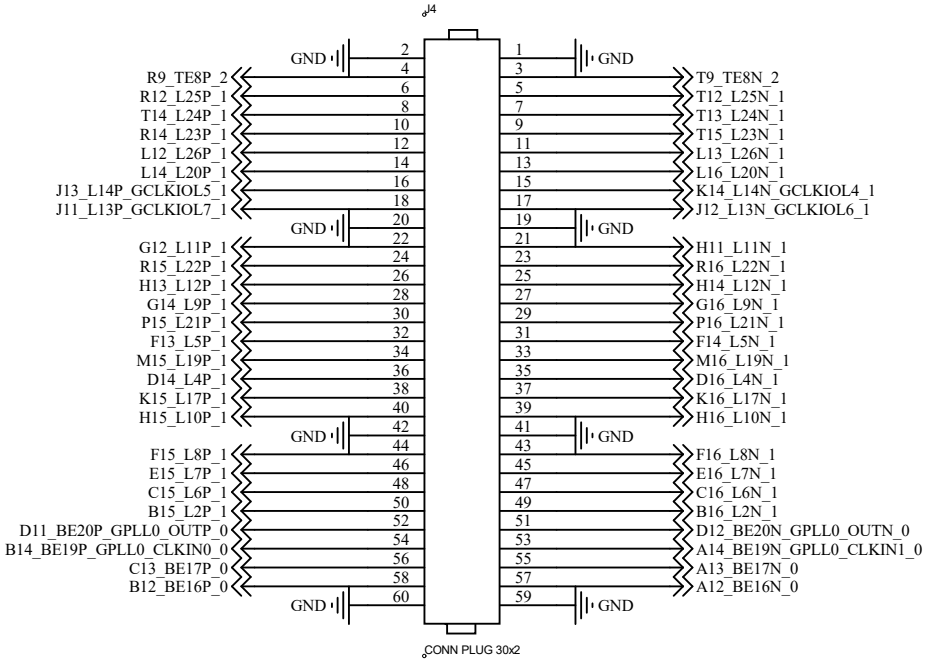

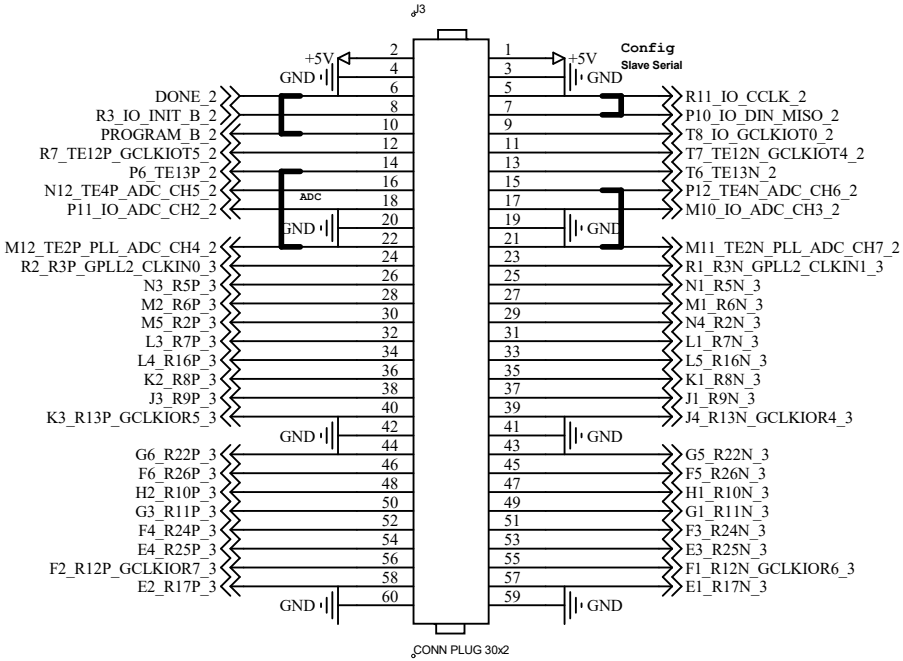

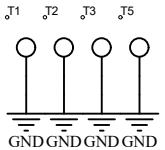

Chengdu Heiying electronic technology co.,Ltd

Title: Anlogic Eagle FPGA E104

Size: A | Document Number: Connectors | Rev: V2.0

Date: | Sheet 9 of 9

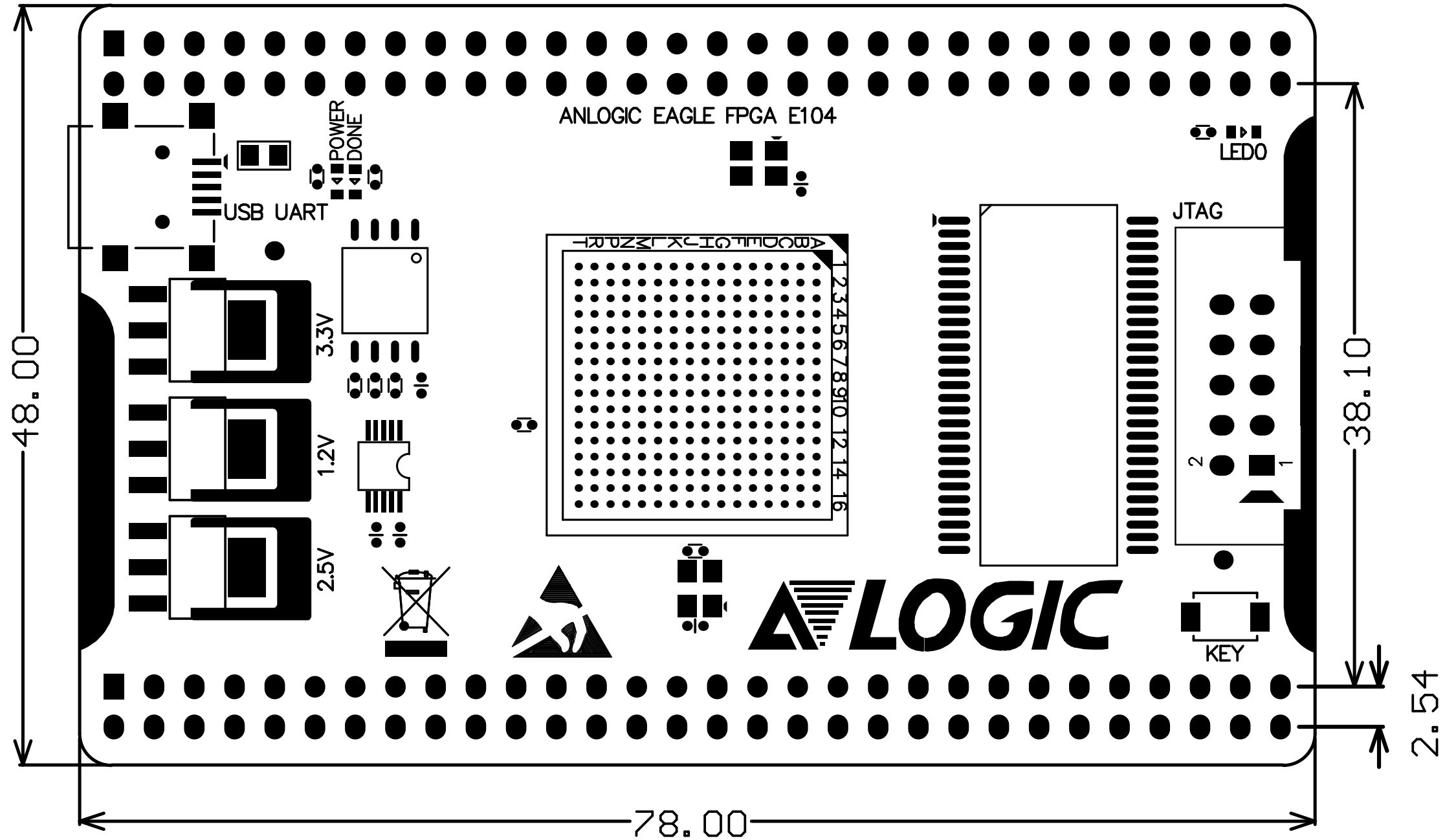
ANLOGIC EAGLE FPGA E104
POWER
DONE
USB UART
3.3V
1.2V
2.5V
LED0
JTAG
KEY
48.00
38.10
2.54
78.00